ECN NO.	REV	DATE	DESCRIPTION	APP'D
	A0	2021-12-1	drawing release	kevin
	A1	2022-5-24	drawing modify	kevin

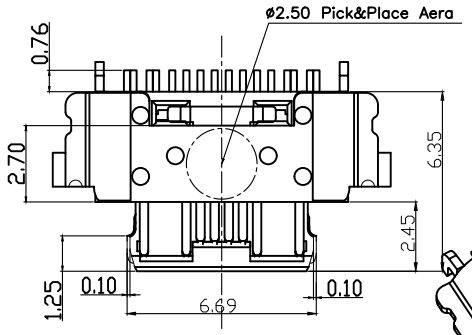

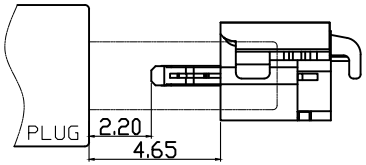

RECEPTACAL

AFTER MATING

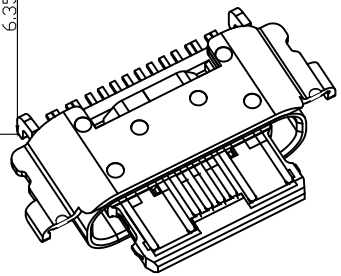

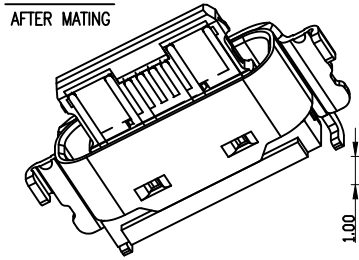

电路A型

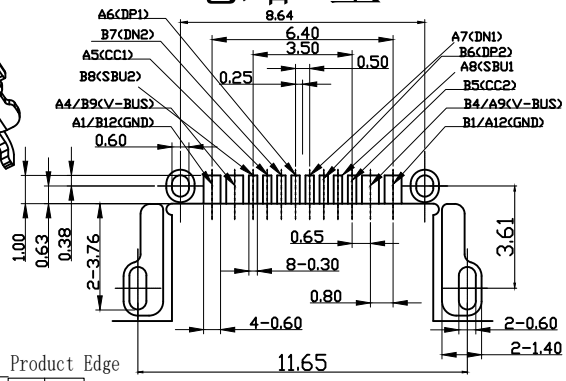

RECOMMENDED P.C.B. LAYOUT

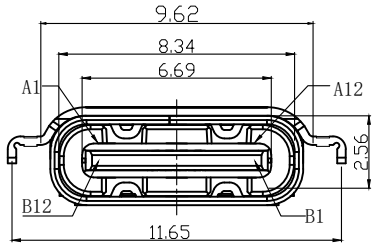

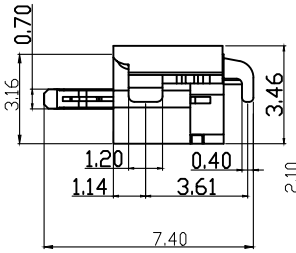

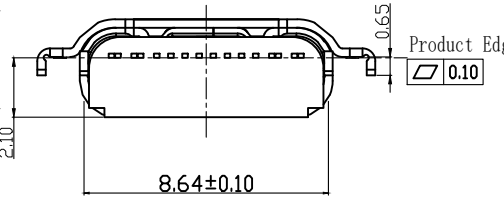

A1	GND	B12	GND
A4	VBUS	B9	VBUS
A5	CC1	B8	SBU2
A6	DP1	B7	DN2
A7	DN1	B6	DP2
A8	SBU1	B5	CC2
A9	VBUS	B4	VBUS
A12	GND	B1	GND
PIN	SIGNAL NAME	PIN	SIGNAL NAME

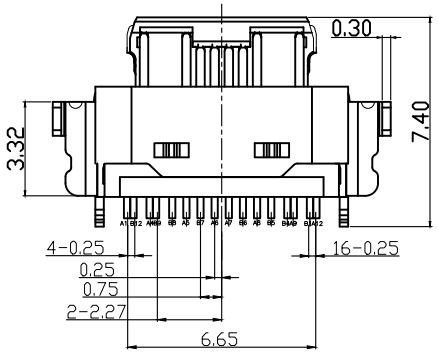

NOTES:

SPECIFICATION:

1. CURRENT RATING: 5.0A MAX
2. VOLTAGE: 100 VAC
3. TEMPERATURE RANGE: -30 °C ~ 85 °C
4. CONTACT RESISTANCE: 40 MILLIONHM MAX
5. INSULATION RESISTANCE: 100 MEGOHMS MIN.
6. LNSERTION FORCE : 5N~20N
7. UNMATING FORCE: 8N~20N
8. DURABILITY: 10,000 CYCLES

NO.	DESCRIPTION	MATERIAL	REMARKS	QTY
7	COVER SHELL	STAINLESS STEEL	NI Plated	1PCS
6	SHELL	STAINLESS STEEL	NI Plated	1PCS
5	SHIELDING PLATE	STAINLESS STEEL	---	1PCS
4	MD	HIGH TEMPERATURE PLASTIC	BLACK	1PCS
3	CONTACT	COPPER ALLOY	Au/NI Plated	1SET
2	CONTACT	COPPER ALLOY	Au/NI Plated	1SET
1	HOUSING	HIGH TEMPERATURE PLASTIC	BLACK	1PCS

LINEAR		ANGLE
X.	±0.50	X.°± 2°
.X	±0.30	.X°± 1°
.XX	±0.20	.XX°± 0.5°
.XXX	±0.10	

GENERAL TOLERANCE UNLESS OTHERWISE NOTED

NAME(INTENDED USE) TYPE C F

PART NO.(INTENDED USE) UB16-81421A21

APPD:

CHKD: kevin.huang

DR: kevin.huang 3/9-21

东莞市全晟通精密制造有限公司

DONGGUAN QUAN SHENG TONG PRECISION MANUFACTURING CO.LTD.

TITLE: CUSTOMER DRAWING

C F 单排16P 沉板2.10 CONN—电路A型

DWG NO.: UB-0021

UNITS	SCALE	SHEET	REV.
mm	N/A	1/1	A1