ECN NO.	REV	DATE	DESCRIPTION	APP'D
	A0	2024-11-26	drawing release	kevin
	A1	2025-11-29	modify drawing	kevin

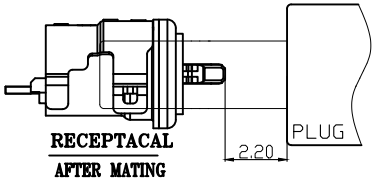

RECEPTACAL
AFTER MATING

NOTES:
SPECIFICATION:

1. CURRENT RATING: 8.0A MAX
2. VOLTAGE: 100 VAC
3. TEMPERATURE RANGE: -30 °C ~ 85 °C
4. CONTACT RESISTANCE: 40 MILLIONHM MAX
5. INSULATION RESISTANCE: 100 MEGOHMS MIN.
6. LNSERTION FORCE : 6N~20N
7. UNMATING FORCE: 8N~20N
8. DURABILITY: 10,000 CYCLES

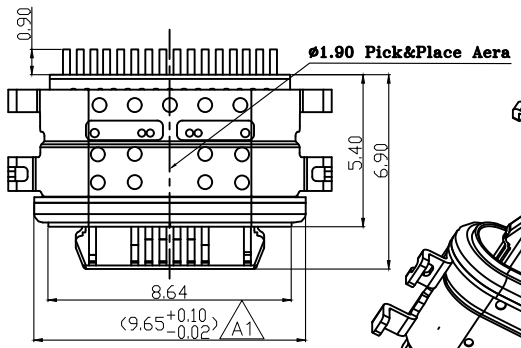

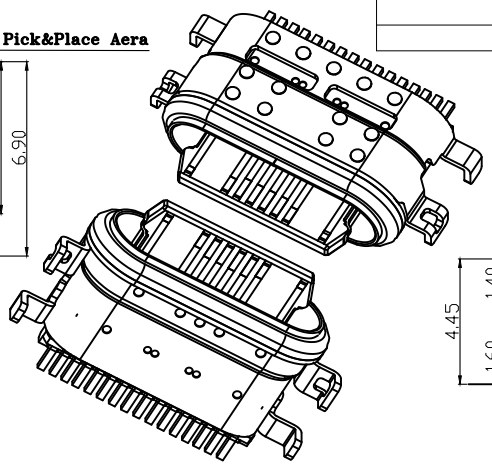

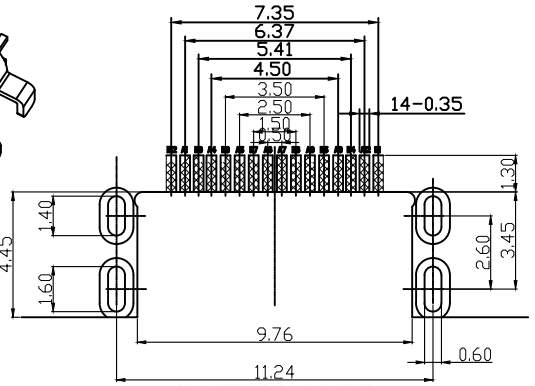

RECOMMENDED P.C.B. LAYOUT
TOLERANCE UNSPECIFIED ±0.05mm

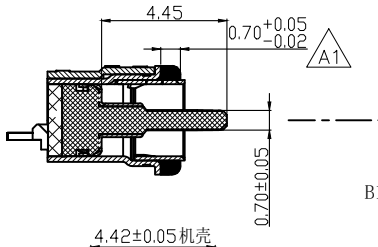

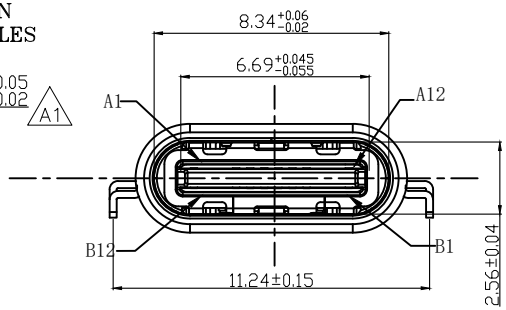

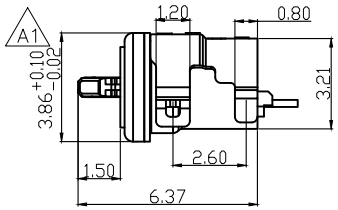

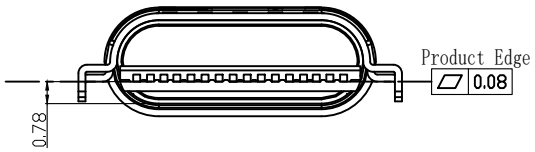

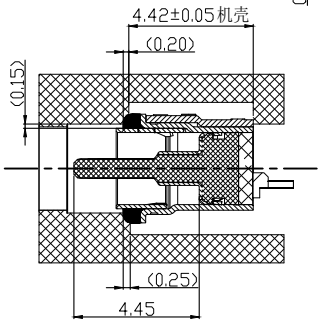

Assembly drawing

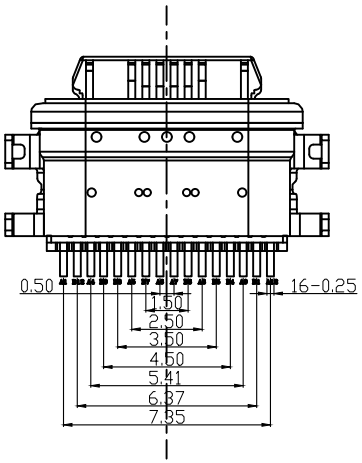

NO.	DESCRIPTION	MATERIAL	REMARKS	QTY
9	SEALING	SILICON DIOXIDE	---	
8	EMC	STAINLESS STEEL	---	
7	SHELL	STAINLESS STEEL	NI Plated	1PCS
6	OVER SHELL	STAINLESS STEEL	NI Plated	1PCS
5	SHIELDING PLATE	STAINLESS STEEL	---	1PCS
4	MD	HIGH TEMPERATURE PLASTIC	PA9T- BLACK	1PCS
3	CONTACT	COPPER ALLOY	Au: 30u"/NI Plated	1SET
2	CONTACT	COPPER ALLOY	Au: 30u"/NI Plated	1SET
1	HOUSING	HIGH TEMPERATURE PLASTIC	PA9T -BLACK	1PCS

PIN	SIGNAL NAME	PIN	SIGNAL NAME
A1	GND	B12	GND
A4	VBUS	B9	VBUS
A5	CC1	B8	SBU2
A6	DP1	B7	DN2
A7	DN1	B6	DP2
A8	SBU1	B5	CC2
A9	VBUS	B4	VBUS
A12	GND	B1	GND

IP-68

LINEAR		ANGLE
X.	±0.50	X.° ± 2°
.X	±0.30	.X° ± 1°
.XX	±0.20	.XX° ± 0.5°
.XXX	±0.10	

GENERAL TOLERANCE UNLESS OTHERWISE NOTED

NAME(INTENDED USE) TYPE C F
PART NO.(INTENDED USE) UB16-81421D43
APPD:
CHKD: kevin.huang
DR: kevin.huang 11/26-24

东莞市全晟通精密制造有限公司
DONGGUAN QUAN SHENG TONG PRECISION MANUFACTURING CO.,LTD.

TITLE: CUSTOMER DRAWING
C F 单排16P 沉板0.78 防水IP68型CONN

DWG NO.: UB-0043

UNITS	SCALE	SHEET	REV.
mm	N/A	1/1	A1